2023

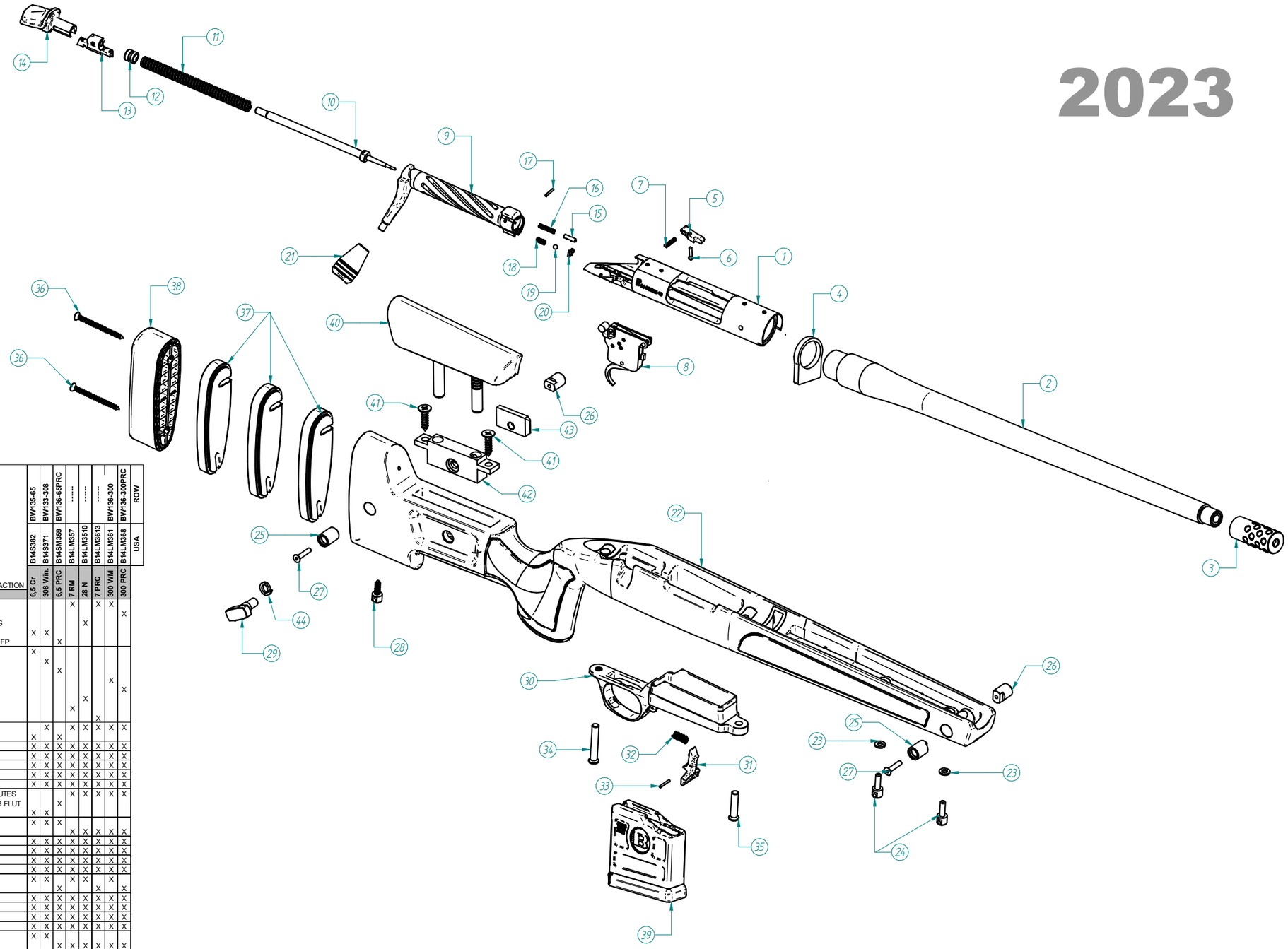

BERGARA

(*) CERAKOTE = BARREL ACTION

#	DESCRIPTION		BOM ITEM	BOM DESCRIPTION	6,5 Cr	308 Win.	6,5 PRC	7 RM	28 N	7 PRC	300 WM	300 PRC
					B14S382	B14S371	B14SM359	B14LM357	B14LM3510	B14LM3613	B14LM361	B14LM368
					BW135-65	BW133-308	BW136-65PRC	------	------	------	BW136-300	BW136-300PRC
												ROW
												USA
1	CARCASA	*RECEIVER*	**RMEB14LA01RC**	32114-REC MEC B14 LONG RH CARBONO				X		X	X	
			RMEB14LA02RC	33151FP- REC 300 PRC MEC B14 LONG RH CAR FP								X
			RMEB14LA04RC	33224MG- REC 28 NOSLER MEC B14 LONG RH CAR MG					X			
			RMEB14SA01RC	31434-REC MEC B14 SHORT RH CARBONO	X	X						
			RMEB14SA02RC	33150FP-REC 6,5 PRC MEC B14 SHORT RH CARBONO FP			X					
2	CAÑON	*BARREL*	**TUB14212C**	40114-S-HMR_BMPD21,6-6,5CRP1:8E6L24C-R5/8US	X							
			TUB14301C	40113S-HMRD21,6-308P1:10L20R5/8US		X						
			TUB14307C	40114-S-HMRD21,6-65PRC_P1:8E6L24R5/8US			X					
			TUB14751C	40153-LM-HMRD21,6-300WMP1:10L26R5/8US							X	
			TUB14756C	40153-LM-HMRD21,6-300PRCP1:09L26R5/8US								X
			TUB14757C	40195-LM-HMRD21,6-28NOSLEP1:9,5E4L26R5/8US					X			
			TUB14758C	40164-LM-HMRD21,6-7mm RMP1:9,5E4L24R5/8US				X				
			TUB14765C	40164-LM-HMR21,3 7PRCP1:8E6L24R5/8US						X		
3	FRENO DE BOCA	*MUZZLE BRAKE*	**33194**	30 CAL D21.3 (.840) MUZZLEBRAKE 5/8 24 UNEF		X		X	X	X	X	X
			33197	65 CAL D21.3 (.840) MUZZLEBRAKE 5/8 24 UNEF	X		X					
4	RECOIL LUG	*RECOIL LUG*	**32672C**	RECOIL LUG	X	X	X	X	X	X	X	X
5	PALANCA RETENCION CERROJO	*BOLT CATCH LEVER*	**31411**	TOPE ESCAMOTEABLE B14	X	X	X	X	X	X	X	X
6	TORNILLO RETENCION CERROJO	*BOLT CATCH SCREW*	**31428**	PASADOR TOPE	X	X	X	X	X	X	X	X
7	MUELLE RETENCION CERROJO	*BOLT CATCH SPRING*	**31585**	MUELLE DE TOPE DE BOLT	X	X	X	X	X	X	X	X
8	DISPARADOR	*TRIGGER*	**32800**	BERGARA TRIGGER	X	X	X	X	X	X	X	X
9	CUERPO CERROJO	*BOLT BODY*	**CMEB14LM01RCF**	33102BF- BOLT MEC B14 LONG MAG RH CARBONO FLUTES				X	X	X	X	X
			CMEB14SM01RCF	33100BF-BOLT MAG 6,5PRC MEC B14 SHORT RH CARB FLUT			X					
			CMEB14SA01RCF	33100F- BOLT MEC B14 SHORT RH CARBONO FLUTES	X	X						
10	PERCUTOR	*FIRING PIN*	**33101**	PERCUTOR B14 CORTO 2018	X	X	X					
			33103	PERCUTOR B14 LARGO 2018				X	X	X	X	X
11	MUELLE PERCUTOR	*FIRING PIN SPRING*	**32993**	MUELLE PERCUTOR B14	X	X	X	X	X	X	X	X
12	CASQUILLO DEL PERCUTOR	*FIRINGG PIN BUSHING*	**32994**	CORREDERA	X	X	X	X	X	X	X	X
13	ENGANCHE DEL PERCUTOR	*FIRING PIN LOCK*	**31432D**	COCKING PIECE DISP REM	X	X	X	X	X	X	X	X
14	CUBIERTA DEL PERCUTOR	*FIRING PIN SHROUD*	**32995**	CAPUCHON MIM	X	X	X	X	X	X	X	X
15	EXPULSOR	*EJECTOR*	**31450**	EJECTOR PIN	X	X		X	X		X	
			31450P	EJECTOR PIN			X			X		X
16	MUELLE EMPUJE	*EJECTOR PLUNGER SPRING*	**31451**	EJECTOR SPRING	X	X	X	X	X	X	X	X
17	PASADOR EMPUJE	*EJECTOR PIN*	**31587**	PASADOR ESPIRAL DE 2 x 12 DIN 7343	X	X	X	X	X	X	X	X
18	MUELLE EXTRACTOR	*EXTRACTOR SPRING*	**32197**	EXTRACTOR SPRING	X	X	X	X	X	X	X	X
19	BOLA DE EXTRACTOR	*EXTRACTOR BALL*	**32196**	BOLA	X	X	X	X	X	X	X	X
20	EXTRACTOR	EXTRACTOR	**32198**	STANDARD EXTRACTOR	X	X						
			32198B	MAGNUM EXTRACTOR			X	X	X	X	X	X
21	POMO DEL CERROJO	*BOLT KNOB*	**32506**	KNOB	X	X	X	X	X		X	X
22	CULATA	STOCK	**32467B**	HMR SHORT STOCK WILDERNESS	X	X	X					
			32555B	HMR LONG STOCK WILDERNESS				X	X	X	X	X
23	ARANDELA DE PLASTICO	*PLASTIC WASHER*	**32576**	ARANDELA DE NYLON NEGRO 5,3	X	X	X	X	X	X	X	X
24	ROTULA PORTACORREAS DEL.	*FRONT SLING SWIVEL*	**32497**	SWIVEL STUD - UN	X	X	X	X	X	X	X	X
25	SOPORTE PORTACORR. DCH.	*RIGHT SLING SWIVEL*	**32475**	FLUSH CUP - THREADED	X	X	X	X	X	X	X	X
26	SOPORTE PORTACORR. IZQ.	*LEFT SLING SWIVEL*	**32474**	FLUSH CUP - RIVETED	X	X	X	X	X	X	X	X
27	TORNILLO SUJECC SOPORTES	*SLING SWIVEL SCREW*	**32476**	FLUSH CUP SCREW - FRONT	X	X	X	X	X	X	X	X
28	ROTULA PORTACORREAS TRAS.	*REAL SLING SWIVEL*	**29116**	BACK SCREW	X	X	X	X	X	X	X	X
29	TORNILLO REG. CARRILLERA	*CKECK PIECE REGULATION SCREW*	**32484**	KNOB FOR CHEEK PIECE	X	X	X	X	X	X	X	X
30	GUARDAMONTES	TRIGGER GUARD	**32493**	TRIGGER GUARD	X	X	X					
			32557	TRIGGER GUARD - LONG VERSION				X		X	X	
			32880	TRIGGER GUARD - LONG (3.175) VERSION					X			X
31	PALANCA CARGADOR	*LEVER*	**32494**	LEVER	X	X	X	X	X	X	X	X
32	MUELLE PALANCA CARGADOR	*LEVER SPRING*	**32496**	SPRING FOR MAGAZINE LEVER	X	X	X	X	X	X	X	X
33	PASADOR PALANCA CARGADOR	*LEVER PIN*	**29957**	PASADOR ESPIRAL DE 2 x 14 DIN 7343	X	X	X	X	X	X	X	X
34	TORNILLO TRASERO CULATA	*STOCK REAR SCREW*	**31422**	TORNILLO ALLEN TRASERO CL12	X	X	X	X	X	X	X	X
35	TORNILLO DELANTERO CULATA	*STOCK FRONT SCREW*	**31422B**	TORNILLO ALLEN DELANTERO CL12	X	X	X	X	X	X	X	X
36	TIRAFONDO CANTONERA	*RECOIL PAD SCREW*	**32489**	SCREW FOR RECOIL PAD	X	X	X	X	X	X	X	X
37	SEPARADOR CANTONERA	*RECOIL PAD SPACER*	**32490**	SPACER FOR RECOIL PAD	X	X	X	X	X	X	X	X
38	CANTONERA	*RECOIL PAD*	**33339**	RECOIL PAD	X	X	X	X	X	X	X	X
39	CARGADOR	MAGAZINE	**32820**	5 ROUND MAG - SHORT - AICS COMPATIBLE	X	X						
			33153	AICS COMPATIBLE LONG 5 ROUND MAG				X		X	X	
			33156	MAGAZINE 65PRC (00100-0006)			X					
			33157	(00100-0023) 300PRC 300WM SSSF MAGAZ					X			X
40	CARRILLERA	CHECK PIECE	**32465W**	HMR SA CHEEK PIECE (WILDERNESS)	X	X	X					
			32696W	HMR WILDERNESS LA CHEECK PIECE				X	X	X	X	X
41	TIRAFONDO SUJECCION BASE	*SUPPORT SCREW*	**32469**	SCREW FOR CHECK PIECE GUIDE	X	X	X	X	X	X	X	X
42	BASE GUIA CARRILLERA	*SUPPORT FOR THE GUIDE*	**32510**	FRONT BASE	X	X	X	X	X	X	X	X
43	TUERCA FIJACION CARRILLERA	*CHECK PIECE REGULATION NUT*	**32524**	NUT	X	X	X	X	X	X	X	X
44	ARANDELA DE PRESION	*FIXING WASHER*	**33130**	ARANDELA DE PRESION 8 DIN 7980 (GROWER)	X	X	X	X	X	X	X	X
*			**H234**	CERAKOTE H-234 SNIPER GREY	X	X	X	X	X	X	X	X

WILDERNESS HMR

Documento de soporte. En caso de duda o discrepancia consultar la última actualización del Listado de Materiales en la ERP (Libra) .	Rev	1
	Fecha	05/04/2023