2022 ROW TIMBER FLOORPLATE

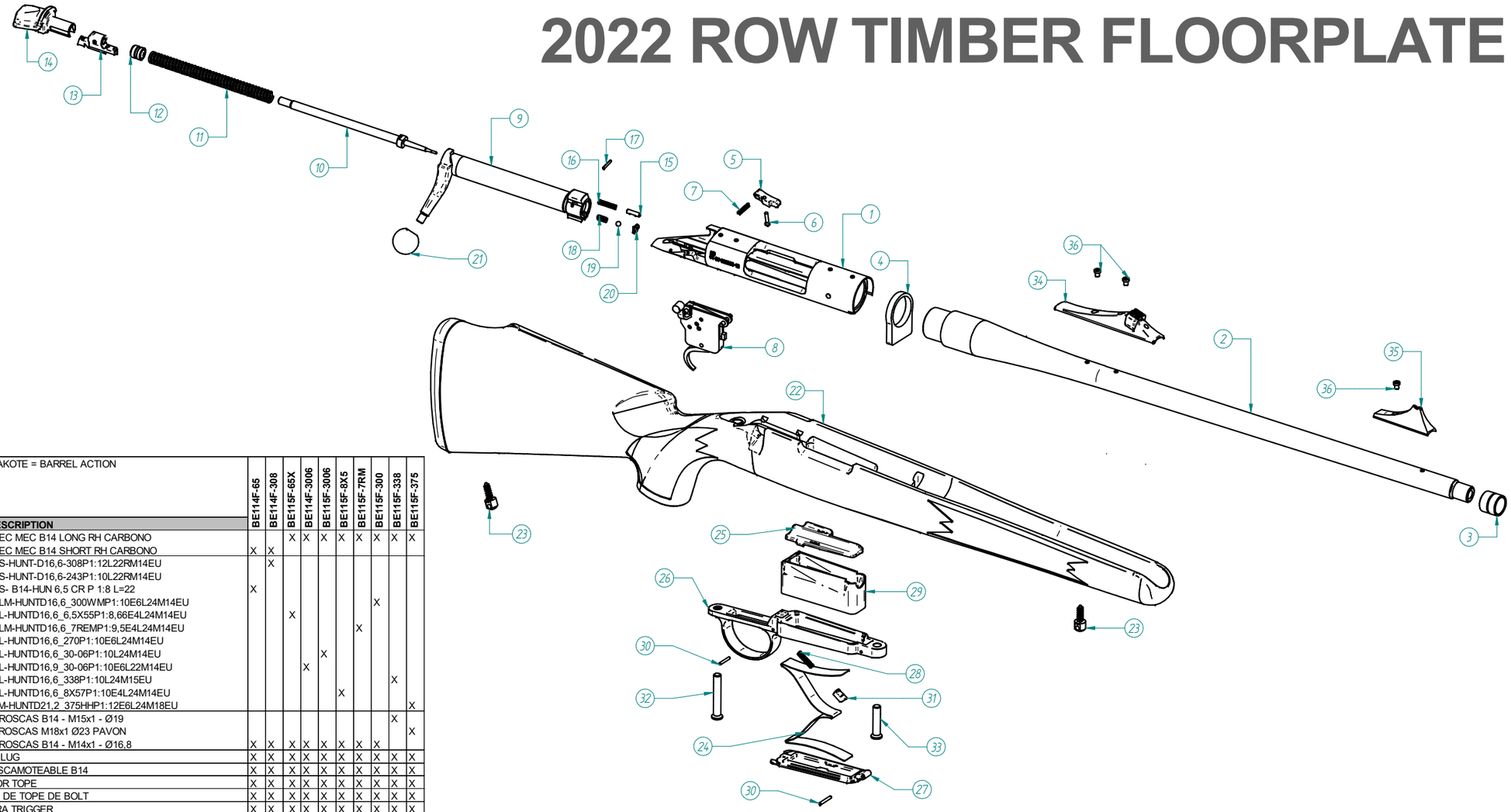

BERGARA

(*) CERAKOTE = BARREL ACTION

#	DESCRIPTION		BOM ITEM	BOM DESCRIPTION	BE114F-65	BE114F-308	BE115F-65X	BE114F-3006	BE115F-3006	BE115F-8X5	BE115F-7RM	BE115F-300	BE115F-338	BE115F-375
1	CARCASA	*RECEIVER*	**RMEB14LA01RC**	32114-REC MEC B14 LONG RH CARBONO			X	X	X	X	X	X	X	X
			RMEB14SA01RC	31434-REC MEC B14 SHORT RH CARBONO	X	X								
2	CAÑON	*BARREL*	**31700R**	31700R-S-HUNT-D16,6-308P1:12L22RM14EU		X								
			31701R	31700R-S-HUNT-D16,6-243P1:10L22RM14EU										
			31702R	31700R-S- B14-HUN 6,5 CR P 1:8 L=22	X									
			31712R	31710R-LM-HUNTD16,6_300WMP1:10E6L24M14EU								X		
			31713R	31710R-L-HUNTD16,6_6,5X55P1:8,66E4L24M14EU			X							
			31714R	31710R-LM-HUNTD16,6_7REMP1:9,5E4L24M14EU							X			
			TUB14601C	31710R-L-HUNTD16,6_270P1:10E6L24M14EU										
			TUB14602C	31710R-L-HUNTD16,6_30-06P1:10L24M14EU					X					
			TUB14603C	32433R-L-HUNTD16,9_30-06P1:10E6L22M14EU				X						
			TUB14604C	32376R-L-HUNTD16,6_338P1:10L24M15EU									X	
			TUB14605C	31710R-L-HUNTD16,6_8X57P1:10E4L24M14EU						X				
			TUB14903C	40117-LM-HUNTD21,2_375HHP1:12E6L24M18EU										X
3	CUBRE ROSCAS	*TREAD CUP*	**32418**	CUBRE-ROSCAS B14 - M15x1 - Ø19									X	
			32558	CUBRE ROSCAS M18x1 Ø23 PAVON										X
			32322	CUBRE-ROSCAS B14 - M14x1 - Ø16,8	X	X	X	X	X	X	X	X		
4	RECOIL LUG	*RECOL LUG*	**32672C**	RECOIL LUG	X	X	X	X	X	X	X	X	X	X
5	PALANCA RETENCION CERROJO	*BOLT CATCH LEVER*	**31411**	TOPE ESCAMOTEABLE B14	X	X	X	X	X	X	X	X	X	X
6	TORNILLO RETENCION CERROJO	*BOLT CATCH SCREW*	**31428**	PASADOR TOPE	X	X	X	X	X	X	X	X	X	X
7	MUELLE RETENCION CERROJO	*BOLT CATCH SPRING*	**31585**	MUELLE DE TOPE DE BOLT	X	X	X	X	X	X	X	X	X	X
8	DISPARADOR	*TRIGGER*	**32800**	BERGARA TRIGGER	X	X	X	X	X	X	X	X	X	X
9	CUERPO CERROJO	*BOLT BODY*	**CMEB14LA01RC**	33102- BOLT MEC B14 LONG RH CARBONO			X	X	X	X				
			CMEB14LM01RC	33102B- BOLT MEC B14 LONG MAG RH CARBONO							X	X	X	X
			CMEB14SA01RC	33100- BOLT MEC B14 SHORT RH CARBONO	X	X								
10	PERCUTOR	*FIRING PIN*	**33101**	PERCUTOR B14 CORTO 2018	X	X								
			33103	PERCUTOR B14 LARGO 2018			X	X	X	X	X	X	X	X
11	MUELLE PERCUTOR	*FIRING PIN SPRING*	**32993**	MUELLE PERCUTOR B14	X	X	X	X	X	X	X	X	X	X
12	CASQUILLO DEL PERCUTOR	*FIRINGG PIN BUSHING*	**32994**	CORREDERA	X	X	X	X	X	X	X	X	X	X
13	ENGANCHE DEL PERCUTOR	*FIRING PIN LOCK*	**31432D**	COCKING PIECE DISP REM	X	X	X	X	X	X	X	X	X	X
14	CUBIERTA DEL PERCUTOR	*FIRING PIN SHROUD*	**32995**	CAPUCHON MIM	X	X	X	X	X	X	X	X	X	X
15	EXPULSOR	*EJECTOR*	**31450**	EJECTOR PIN	X	X	X	X	X	X	X	X	X	X
16	MUELLE EMPUJE	*EJECTOR PLUNGER SPRING*	**31451**	EJECTOR SPRING	X	X	X	X	X	X	X	X	X	X
17	PASADOR EMPUJE	*EJECTOR PIN*	**31587**	PASADOR ESPIRAL DE 2 x 12 DIN 7343	X	X	X	X	X	X	X	X	X	X
18	MUELLE EXTRACTOR	*EXTRACTOR SPRING*	**32197**	EXTRACTOR SPRING	X	X	X	X	X	X	X	X	X	X
19	BOLA DE EXTRACTOR	*EXTRACTOR BALL*	**32196**	BOLA	X	X	X	X	X	X	X	X	X	X
20	EXTRACTOR	*EXTRACTOR*	**32198**	STANDARD EXTRACTOR	X	X	X	X	X	X				
			32198B	MAGNUM EXTRACTOR							X	X	X	X
21	POMO DEL CERROJO	*BOLT KNOB*	**31926**	POMO BOLA	X	X	X	X	X	X	X	X	X	X
22	CULATA	*STOCK*	**32215LM**	CULATA MADERA B14 LARGO (TIMBER)			X	X	X	X				
			32215M	CULATA MADERA B14 CORTO (TIMBER)	X	X								
			32215MM	CULATA MADERA B14 MAGNUM (TIMBER)							X	X	X	
			32215MMS	CULATA MADERA B14 MAGNUM VARM SEN (TIMBER)										X
23	ROTULA PORTACORREA	*SLING SWIVEL*	**29116**	BACK SCREW	X	X	X	X	X	X	X	X	X	X
24	MUELLE DEL GARGADOR	*MAGAZINE SPRING*	**31444S**	MUELLE CAJERA		X	X	X	X	X	X	X	X	X
			31444C	MUELLE MAGAZINE CREEDMOOR	X									
25	SEGUIDOR	*FOLLOWER*	**31427**	SEGUIDOR CORTO	X	X								
			32115	SEGUIDOR LARGO			X	X	X	X	X	X	X	X
26	GUARDAMONTE	*TRIGGER GUARD*	**32216**	B14 SHORT SUPPORT	X	X								
			32116L				X	X	X	X	X	X	X	X
27	BANDEJA DE CARGADOR	*MAGAZINE TRAY*	**32218**	B14 SHORT CAP	X	X								
			32218L				X	X	X	X	X	X	X	X
28	MUELLE BOTON APERTURA	*OPENNING BUTTON SPRING*	**32219**	MUELLE FLOOR PLATE	X	X	X	X	X	X	X	X	X	X
29	CARGADOR	*MAGAZINE*	**31431**	CAJA CORTA	X	X								
			32113	CAJA LARGA			X	X	X	X				
			32113U	CAJA ULTRA							X	X	X	X
30	PASADOR GUARDAMONTES	*TIGER GUARD LOCK PINS*	**32132B**	PASADOR Ø2x14 DIN 7	X	X	X	X	X	X	X	X	X	X
31	BOTON APERTURA CARGADOR	*TIGGER GUARD LOCKING PIN*	**32217**	PALANCA B14	X	X	X	X	X	X	X	X	X	X
32	TORNILLO TRASERO CULATA	*STOCK REAR SCREW*	**31422**	TORNILLO ALLEN TRASERO CL12	X	X	X	X	X	X	X	X	X	X
33	TORNILLO DELANTERO CULATA	*STOCK FRONT SCREW*	**31422B**	TORNILLO DELANTERO B14	X	X	X	X	X	X	X	X	X	X
34	CONJUNTO ALZA	*REAR SIGHT*	**31660**	CONJUNTO ALZA BX11	X	X	X	X	X	X	X	X	X	X
35	CONJUNTO MIRA	*FRONT SIGHT*	**32282**	MIRA BX11	X	X	X	X	X	X	X	X	X	X
36	TORNILLO ALZA-MIRA	*SIGHT SCREWS*	**20549T**	TORNILLO DE FIJACION A Y M TORX	X	X	X	X	X	X	X	X	X	X
*			**H146**	CERAKOTE H-146 GRAPHITE BLACK	X	X	X	X	X	X	X	X	X	X

Documento de soporte. En caso de duda o discrepanacia consultar la última actualización del Listado de Materiales en la ERP (Libra) .

Rev0 11-01-2022

2022 ROW TIMBER MAGAZINE

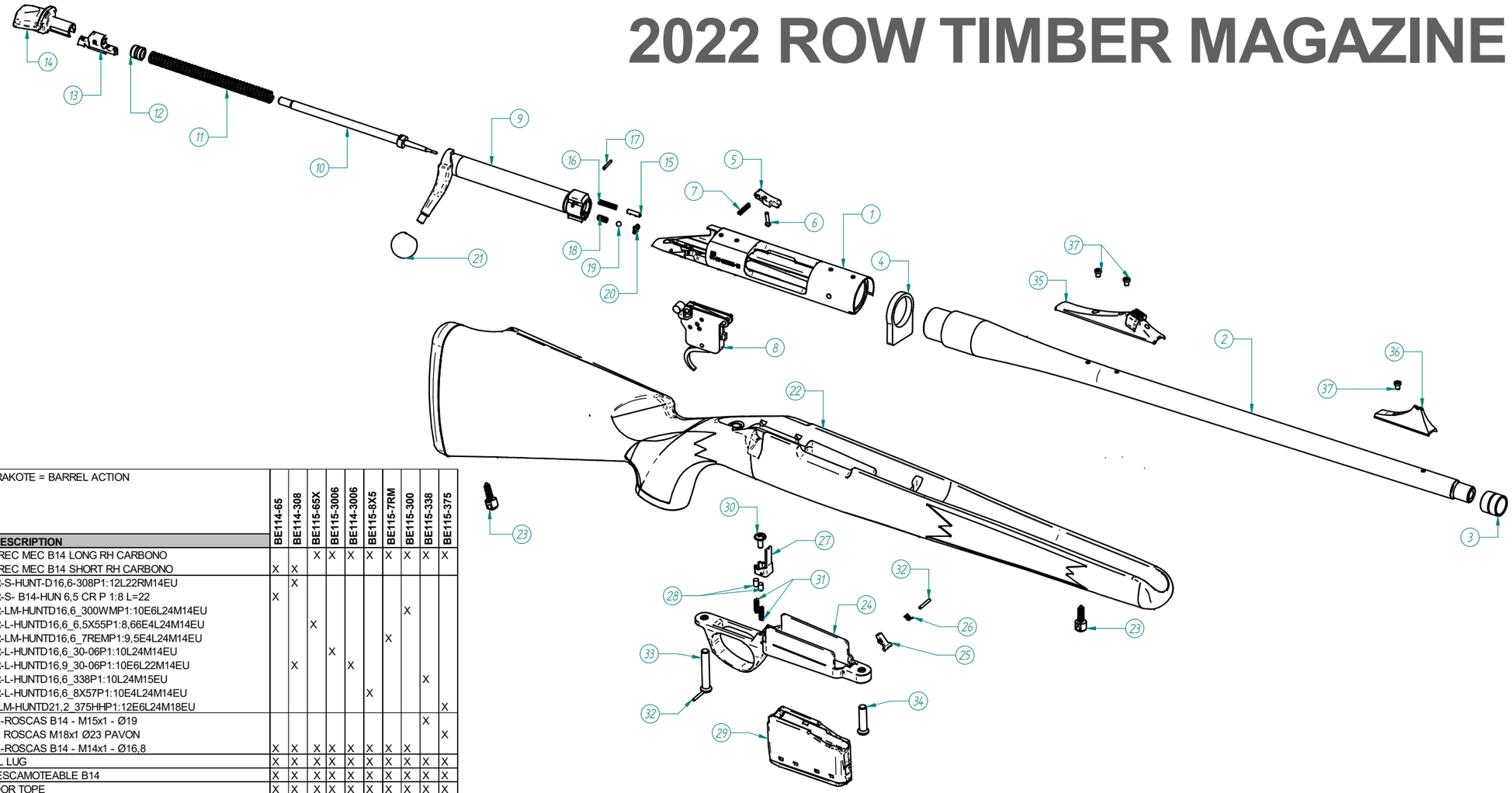

(*) CERAKOTE = BARREL ACTION

#	DESCRIPTION		BOM ITEM	BOM DESCRIPTION	BE114-65	BE114-308	BE115-65X	BE115-3006	BE114-3006	BE115-8X5	BE115-7RM	BE115-300	BE115-338	BE115-375
1	CARCASA	*RECEIVER*	**RMEB14LA01RC**	32114-REC MEC B14 LONG RH CARBONO			X	X	X	X	X	X	X	X
			RMEB14SA01RC	31434-REC MEC B14 SHORT RH CARBONO	X	X								
2	CAÑON	*BARREL*	**31700R**	31700R-S-HUNT-D16,6-308P1:12L22RM14EU		X								
			31702R	31700R-S- B14-HUN 6,5 CR P 1:8 L=22	X									
			31712R	31710R-LM-HUNTD16,6_300WMP1:10E6L24M14EU								X		
			31713R	31710R-L-HUNTD16,6_6,5X55P1:8,66E4L24M14EU			X							
			31714R	31710R-LM-HUNTD16,6_7REMP1:9,5E4L24M14EU							X			
			TUB14602C	31710R-L-HUNTD16,6_30-06P1:10L24M14EU				X						
			TUB14603C	32433R-L-HUNTD16,9_30-06P1:10E6L22M14EU		X			X					
			TUB14604C	32376R-L-HUNTD16,6_338P1:10L24M15EU									X	
			TUB14605C	31710R-L-HUNTD16,6_8X57P1:10E4L24M14EU						X				
			TUB14903C	40117-LM-HUNTD21,2_375HHP1:12E6L24M18EU										X
3	CUBRE ROSCAS	*TREAD CUP*	**32418**	CUBRE-ROSCAS B14 - M15x1 - Ø19									X	
			32558	CUBRE ROSCAS M18x1 Ø23 PAVON										X
			32322	CUBRE-ROSCAS B14 - M14x1 - Ø16,8	X	X	X	X	X	X	X	X		
4	RECOIL LUG	*RECOL LUG*	**32672C**	RECOIL LUG	X	X	X	X	X	X	X	X	X	X
5	PALANCA RETENCION CERROJO	*BOLT CATCH LEVER*	**31411**	TOPE ESCAMOTEABLE B14	X	X	X	X	X	X	X	X	X	X
6	TORNILLO RETENCION CERROJO	*BOLT CATCH SCREW*	**31428**	PASADOR TOPE	X	X	X	X	X	X	X	X	X	X
7	MUELLE RETENCION CERROJO	*BOLT CATCH SPRING*	**31585**	MUELLE DE TOPE DE BOLT	X	X	X	X	X	X	X	X	X	X
8	DISPARADOR	*TRIGGER*	**32800**	BERGARA TRIGGER	X	X	X	X	X	X	X	X	X	X
9	CUERPO CERROJO	BOLT BODY	**CMEB14LA01RC**	33102- BOLT MEC B14 LONG RH CARBONO			X	X	X	X				
			CMEB14LM01RC	33102B- BOLT MEC B14 LONG MAG RH CARBONO							X	X	X	X
			CMEB14SA01RC	33100- BOLT MEC B14 SHORT RH CARBONO	X	X								
10	PERCUTOR	FIRING PIN	**33101**	PERCUTOR B14 CORTO 2018	X	X								
			33103	PERCUTOR B14 LARGO 2018			X	X	X	X	X	X	X	X
11	MUELLE PERCUTOR	*FIRING PIN SPRING*	**32993**	MUELLE PERCUTOR B14	X	X	X	X	X	X	X	X	X	X
12	CASQUILLO DEL PERCUTOR	*FIRINGG PIN BUSHING*	**32994**	CORREDERA	X	X	X	X	X	X	X	X	X	X
13	ENGANCHE DEL PERCUTOR	*FIRING PIN LOCK*	**31432D**	COCKING PIECE DISP REM	X	X	X	X	X	X	X	X	X	X
14	CUBIERTA DEL PERCUTOR	*FIRING PIN SHROUD*	**32995**	CAPUCHON MIM	X	X	X	X	X	X	X	X	X	X
15	EXPULSOR	*EJECTOR*	**31450**	EJECTOR PIN	X	X	X	X	X	X	X	X	X	X
16	MUELLE EMPUJE	*EJECTOR PLUNGER SPRING*	**31451**	EJECTOR SPRING	X	X	X	X	X	X	X	X	X	X
17	PASADOR EMPUJE	*EJECTOR PIN*	**31587**	PASADOR ESPIRAL DE 2 x 12 DIN 7343	X	X	X	X	X	X	X	X	X	X
18	MUELLE EXTRACTOR	*EXTRACTOR SPRING*	**32197**	EXTRACTOR SPRING	X	X	X	X	X	X	X	X	X	X
19	BOLA DE EXTRACTOR	*EXTRACTOR BALL*	**32196**	BOLA	X	X	X	X	X	X	X	X	X	X
20	EXTRACTOR	EXTRACTOR	**32198**	STANDARD EXTRACTOR	X	X	X	X	X	X				
			32198B	MAGNUM EXTRACTOR							X	X	X	X
21	POMO DEL CERROJO	*BOLT KNOB*	**31926**	POMO BOLA	X	X	X	X	X	X	X	X	X	X
22	CULATA	STOCK	**32215LM**	CULATA MADERA B14 LARGO (TIMBER)			X	X	X	X				
			32215M	CULATA MADERA B14 CORTO (TIMBER)	X	X								
			32215MM	CULATA MADERA B14 MAGNUM (TIMBER)							X	X	X	
			32215MMS	CULATA MADERA B14 MAGNUM VARM SEN (TIMBER)										X
23	ROTULA PORTACORREA	*SLING SWIVEL*	**29116**	BACK SCREW	X	X	X	X	X	X	X	X	X	X
24	GUARDAMONTE	TRIGGER GUARD	**32333**	GUARDAMONTES B14 CAJERA CORTO	X	X								
			32333L	GUARDAMONTE CAJERA LARGO			X	X	X	X	X	X	X	X
25	PALANCA SUJECCION CARGADOR	*MAGAZINE CLAMPING LEVER*	**32334**	PALANCA	X	X	X	X	X	X	X	X	X	X
26	MUELLE PALANCA	*LEVER SPRING*	**32335**	MUELLE PALANCA	X	X	X	X	X	X	X	X	X	X
27	CHAPA EMPUJE CARGADOR	*MAGAZINE PUSHING PLATE*	**32336**	CHAPA EMPUJE	X	X	X	X	X	X	X	X	X	X
28	PASADOR EMPUJE	*PUSHING PIN*	**32338**	PASADOR Ø4x6 DIN7	X	X	X	X	X	X	X	X	X	X
29	CARGADOR	MAGAZINE	**32343**	CAJERA CORTA B14	X	X								
			32343L	CAJERA LARGA B14			X	X	X	X				
			32343M	CAJERA LARGA MAGNUM B14							X	X	X	X
30	TORNILLO REGULADOR	*REGULATION SPRING*	**32357**	TORNILLO M4x10 (TORNILLO HAFELE)	X	X	X	X	X	X	X	X	X	X
31	MUELLE DE EMPUJE	*PUSHING SPRING*	**32313**	MUELLE	X	X	X	X	X	X	X	X	X	X
32	PASADOR GUARDAMONTES	*TIGGER GUARD LOCKING PIN*	**32132B**	PASADOR Ø2x14 DIN 7	X	X	X	X	X	X	X	X	X	X
33	TORNILLO TRASERO CULATA	*STOCK REAR SCREW*	**31422**	TORNILLO ALLEN TRASERO CL12	X	X	X	X	X	X	X	X	X	X
34	TORNILLO DELANTERO CULATA	*STOCK FRONT SCREW*	**31422C**	TORNILLO DELANTERO B14	X	X	X	X	X	X	X	X	X	X
35	CONJUNTO ALZA	*REAR SIGHT*	**31660**	CONJUNTO ALZA BX11	X	X	X	X	X	X	X	X	X	X
36	CONJUNTO MIRA	*FRONT SIGHT*	**32282**	MIRA BX11	X	X	X	X	X	X	X	X	X	X
37	TORNILLO ALZA-MIRA	*SIGHT SCREWS*	**20549T**	TORNILLO DE FIJACION A Y M TORX	X	X	X	X	X	X	X	X	X	X
*			**H146**	CERAKOTE H-146 GRAPHITE BLACK	X	X	X	X	X	X	X	X	X	X

Documento de soporte. En caso de duda o discrepanacia consultar la última actualización del LIstado de Materiales en la ERP (Libra) .

Rev0 11-01-2022

2022 ROW TIMBER LH MAGAZINE

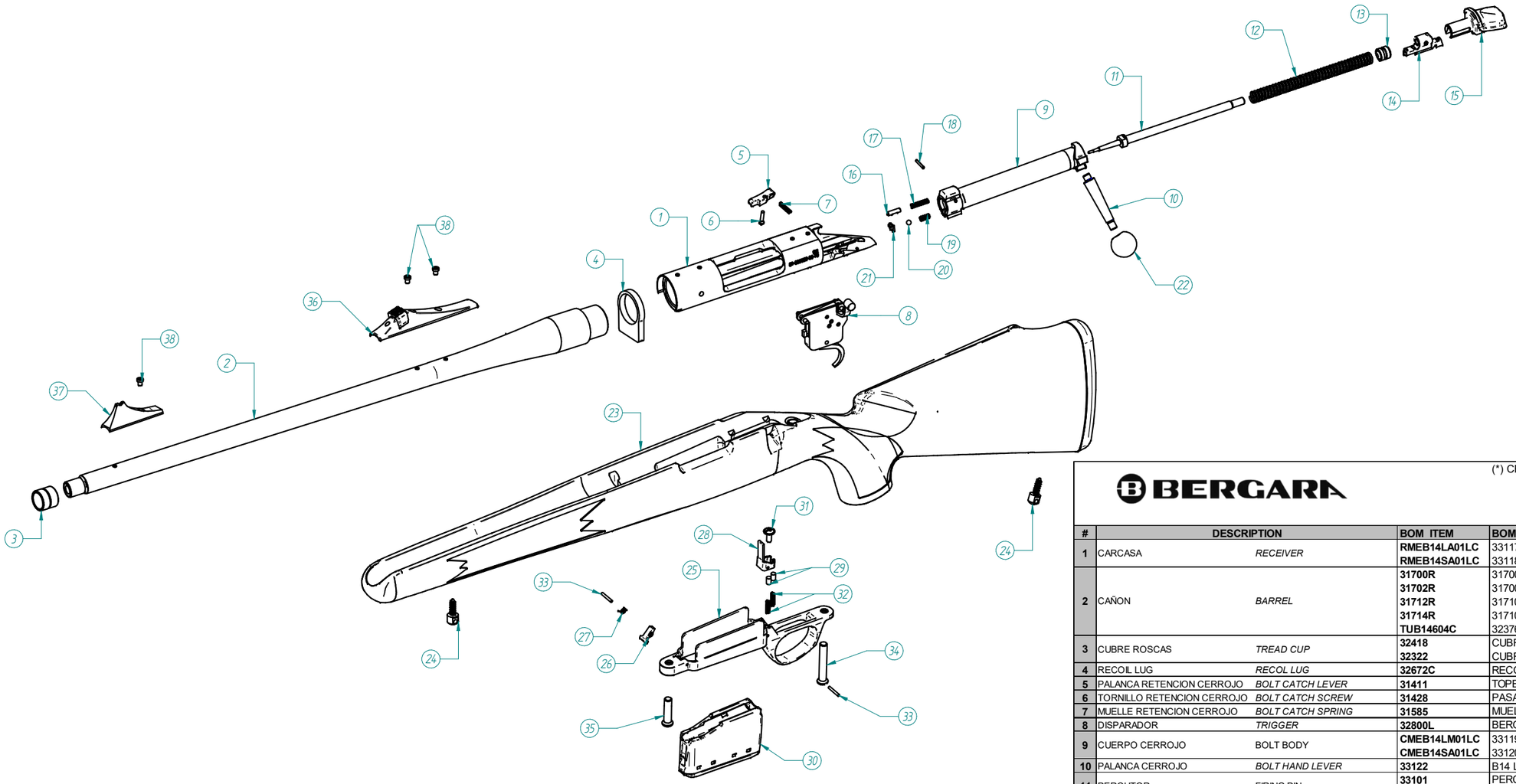

BERGARA

(*) CERAKOTE = BARREL ACTION

#	DESCRIPTION		BOM ITEM	BOM DESCRIPTION	BE114-65Z	BE114-308Z	BE115-7RMZ	BE115-300Z	BE115-338Z
1	CARCASA	*RECEIVER*	**RMEB14LA01LC**	33117-REC MEC B14 LONG LH CARBONO			X	X	X
			RMEB14SA01LC	33118-REC MEC B14 SHORT LH CARBONO	X	X			
2	CAÑON	*BARREL*	**31700R**	31700R-S-HUNT-D16,6-308P1:12L22RM14EU		X			
			31702R	31700R-S- B14-HUN 6,5 CR P 1:8 L=22	X				
			31712R	31710R-LM-HUNTD16,6_300WMP1:10E6L24M14EU				X	
			31714R	31710R-LM-HUNTD16,6_7REMP1:9,5E4L24M14EU			X		
			TUB14604C	32376R-L-HUNTD16,6_338P1:10L24M15EU					X
3	CUBRE ROSCAS	*TREAD CUP*	**32418**	CUBRE-ROSCAS B14 - M15x1 - Ø19					X
			32322	CUBRE-ROSCAS B14 - M14x1 - Ø16,8	X	X	X	X	
4	RECOIL LUG	*RECOL LUG*	**32672C**	RECOIL LUG	X	X	X	X	X
5	PALANCA RETENCION CERROJO	*BOLT CATCH LEVER*	**31411**	TOPE ESCAMOTEABLE B14	X	X	X	X	X
6	TORNILLO RETENCION CERROJO	*BOLT CATCH SCREW*	**31428**	PASADOR TOPE	X	X	X	X	X
7	MUELLE RETENCION CERROJO	*BOLT CATCH SPRING*	**31585**	MUELLE DE TOPE DE BOLT	X	X	X	X	X
8	DISPARADOR	*TRIGGER*	**32800L**	BERGARA TRIGGER - LEFT HANDED	X	X	X	X	X
9	CUERPO CERROJO	BOLT BODY	**CMEB14LM01LC**	33119B- BOLT MEC B14 LONG MAG LH CARBONO			X	X	X
			CMEB14SA01LC	33120- BOLT MEC B14 SHORT LH CARBONO	X	X			
10	PALANCA CERROJO	*BOLT HAND LEVER*	**33122**	B14 LEFT PALANCA	X	X	X	X	X
11	PERCUTOR	FIRING PIN	**33101**	PERCUTOR B14 CORTO 2018	X	X			
			33103	PERCUTOR B14 LARGO 2018			X	X	X
12	MUELLE PERCUTOR	*FIRING PIN SPRING*	**32993**	MUELLE PERCUTOR B14	X	X	X	X	X
13	CASQUILLO DEL PERCUTOR	*FIRINGG PIN BUSHING*	**32994**	CORREDERA	X	X	X	X	X
14	ENGANCHE DEL PERCUTOR	*FIRING PIN LOCK*	**33121D**	B14 LEFT COCKING PIECE	X	X	X	X	X
15	CUBIERTA DEL PERCUTOR	*FIRING PIN SHROUD*	**32995**	CAPUCHON MIM	X	X	X	X	X
16	EXPULSOR	*EJECTOR*	**31450**	EJECTOR PIN	X	X	X	X	X
17	MUELLE EMPUJE	*EJECTOR PLUNGER SPRING*	**31451**	EJECTOR SPRING	X	X	X	X	X
18	PASADOR EMPUJE	*EJECTOR PIN*	**31587**	PASADOR ESPIRAL DE 2 x 12 DIN 7343	X	X	X	X	X
19	MUELLE EXTRACTOR	*EXTRACTOR SPRING*	**32197**	EXTRACTOR SPRING	X	X	X	X	X
20	BOLA DE EXTRACTOR	*EXTRACTOR BALL*	**32196**	BOLA	X	X	X	X	X
21	EXTRACTOR	EXTRACTOR	**32198**	STANDARD EXTRACTOR	X	X			
			32198B	MAGNUM EXTRACTOR			X	X	X
22	POMO DEL CERROJO	*BOLT KNOB*	**31926**	POMO BOLA	X	X	X	X	X
23	CULATA	STOCK	**33125**	CULATA MADERA B14 LH CORTO (TIMBER)	X	X			
			33125LM	CULATA MADERA B14 LH LARGA MAGNUM (TIMBER)			X	X	X
24	ROTULA PORTACORREA	*SLING SWIVEL*	**29116**	BACK SCREW	X	X	X	X	X
25	GUARDAMONTE	TRIGGER GUARD	**32333**	GUARDAMONTES B14 CAJERA CORTO	X	X			
			32333L	GUARDAMONTE CAJERA LARGO			X	X	X
26	PALANCA SUJECCION CARGADOR	*MAGAZINE CLAMPING LEVER*	**32334**	PALANCA	X	X	X	X	X
27	MUELLE PALANCA	*LEVER SPRING*	**32335**	MUELLE PALANCA	X	X	X	X	X
28	CHAPA EMPUJE CARGADOR	*MAGAZINE PUSHING PLATE*	**32336**	CHAPA EMPUJE	X	X	X	X	X
29	PASADOR EMPUJE	*PUSHING PIN*	**32338**	PASADOR Ø4x6 DIN7	X	X	X	X	X
30	CARGADOR	MAGAZINE	**32343**	CAJERA CORTA B14	X	X			
			32343M	CAJERA LARGA MAGNUM B14			X	X	X
31	TORNILLO REGULADOR	*REGULATION SPRING*	**32357**	TORNILLO M4x10 (TORNILLO HAFELE)	X	X	X	X	X
32	MUELLE DE EMPUJE	*PUSHING SPRING*	**32313**	MUELLE	X	X	X	X	X
33	PASADOR GUARDAMONTES	*TIGGER GUARD LOCKING PIN*	**32132B**	PASADOR Ø2x14 DIN 7	X	X	X	X	X
34	TORNILLO TRASERO CULATA	*STOCK REAR SCREW*	**31422**	TORNILLO ALLEN TRASERO CL12	X	X	X	X	X
35	TORNILLO DELANTERO CULATA	*STOCK FRONT SCREW*	**31422C**	TORNILLO DELANTERO B14	X	X	X	X	X
36	CONJUNTO ALZA	*REAR SIGHT*	**31660**	CONJUNTO ALZA BX11	X	X	X	X	X
37	CONJUNTO MIRA	*FRONT SIGHT*	**32282**	MIRA BX11	X	X	X	X	X
38	TORNILLO ALZA-MIRA	*SIGHT SCREWS*	**20549T**	TORNILLO DE FIJACION A Y M TORX	X	X	X	X	X
*			**H146**	CERAKOTE H-146 GRAPHITE BLACK	X	X	X	X	X

Rev0 11-01-2022

2022 ROW TIMBER LH FLOORPLATE

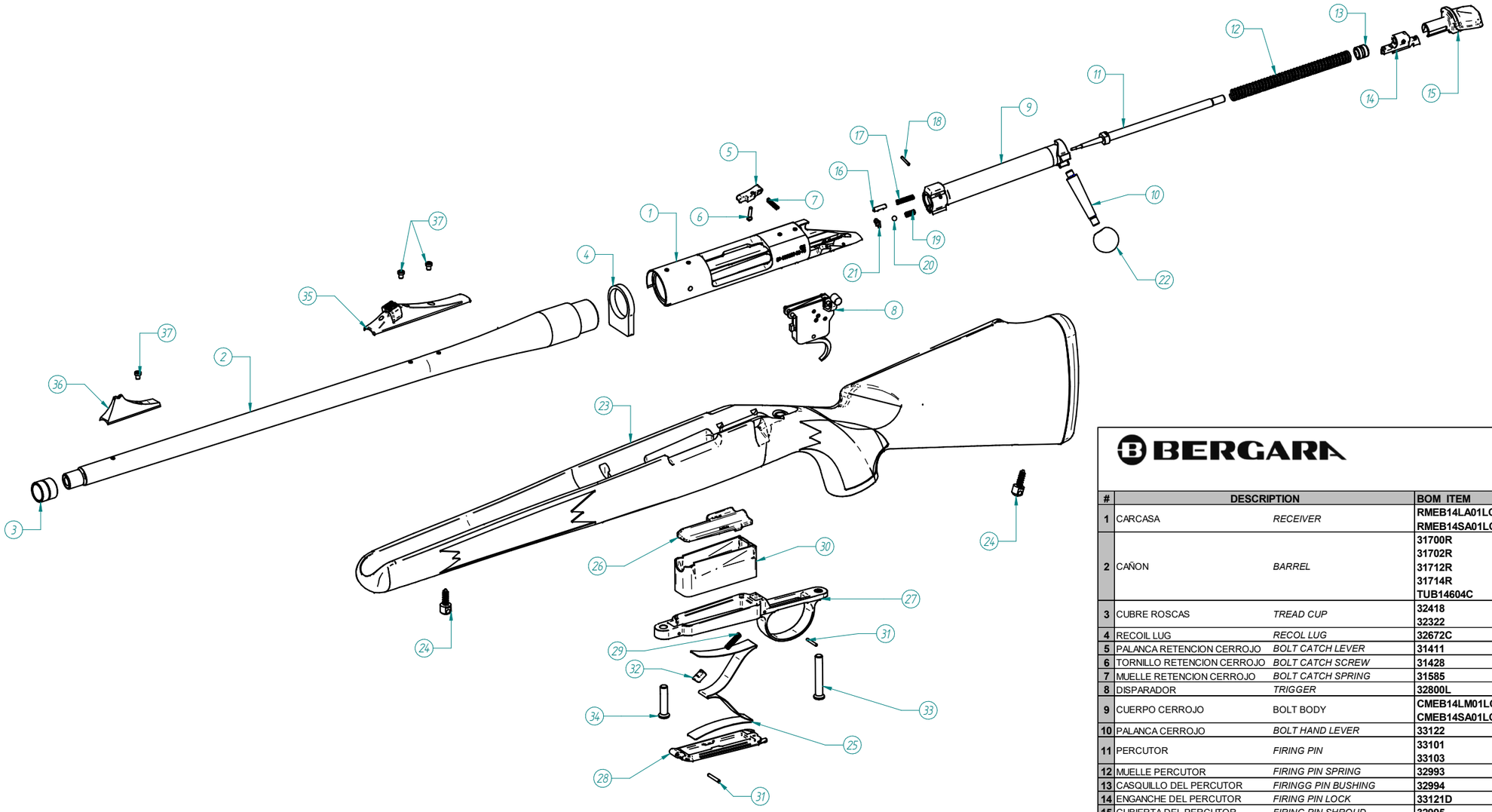

BERGARA

(*) CERAKOTE = BARREL ACTION

#	DESCRIPTION		BOM ITEM	BOM DESCRIPTION	BE114F-65Z	BE114F-308Z	BE115F-7RMZ	BE115F-300Z	BE115F-338Z
1	CARCASA	*RECEIVER*	**RMEB14LA01LC**	33117-REC MEC B14 LONG LH CARBONO					
			RMEB14SA01LC	33118-REC MEC B14 SHORT LH CARBONO	X	X			
2	CAÑON	*BARREL*	**31700R**	31700R-S-HUNT-D16,6-308P1:12L22RM14EU		X			
			31702R	31700R-S- B14-HUN 6,5 CR P 1:8 L=22	X				
			31712R	31710R-LM-HUNTD16,6_300WMP1:10E6L24M14EU				X	
			31714R	31710R-LM-HUNTD16,6_7REMP1:9,5E4L24M14EU			X		
			TUB14604C	32376R-L-HUNTD16,6_338P1:10L24M15EU					X
3	CUBRE ROSCAS	*TREAD CUP*	**32418**	CUBRE-ROSCAS B14 - M15x1 - Ø19					X
			32322	CUBRE-ROSCAS B14 - M14x1 - Ø16,8	X	X	X	X	
4	RECOIL LUG	*RECOL LUG*	**32672C**	RECOIL LUG	X	X	X	X	X
5	PALANCA RETENCION CERROJO	*BOLT CATCH LEVER*	**31411**	TOPE ESCAMOTEABLE B14	X	X	X	X	X
6	TORNILLO RETENCION CERROJO	*BOLT CATCH SCREW*	**31428**	PASADOR TOPE	X	X	X	X	X
7	MUELLE RETENCION CERROJO	*BOLT CATCH SPRING*	**31585**	MUELLE DE TOPE DE BOLT	X	X	X	X	X
8	DISPARADOR	*TRIGGER*	**32800L**	BERGARA TRIGGER - LEFT HANDED	X	X	X	X	X
9	CUERPO CERROJO	BOLT BODY	**CMEB14LM01LC**	33119B- BOLT MEC B14 LONG MAG LH CARBONO			X	X	X
			CMEB14SA01LC	33120- BOLT MEC B14 SHORT LH CARBONO	X	X			
10	PALANCA CERROJO	*BOLT HAND LEVER*	**33122**	B14 LEFT PALANCA	X	X	X	X	X
11	PERCUTOR	*FIRING PIN*	**33101**	PERCUTOR B14 CORTO 2018	X	X			
			33103	PERCUTOR B14 LARGO 2018			X	X	X
12	MUELLE PERCUTOR	*FIRING PIN SPRING*	**32993**	MUELLE PERCUTOR B14	X	X	X	X	X
13	CASQUILLO DEL PERCUTOR	*FIRINGG PIN BUSHING*	**32994**	CORREDERA	X	X	X	X	X
14	ENGANCHE DEL PERCUTOR	*FIRING PIN LOCK*	**33121D**	B14 LEFT COCKING PIECE	X	X	X	X	X
15	CUBIERTA DEL PERCUTOR	*FIRING PIN SHROUD*	**32995**	CAPUCHON MIM	X	X	X	X	X
16	EXPULSOR	*EJECTOR*	**31450**	EJECTOR PIN	X	X	X	X	X
17	MUELLE EMPUJE	*EJECTOR PLUNGER SPRING*	**31451**	EJECTOR SPRING	X	X	X	X	X
18	PASADOR EMPUJE	*EJECTOR PIN*	**31587**	PASADOR ESPIRAL DE 2 x 12 DIN 7343	X	X	X	X	X
19	MUELLE EXTRACTOR	*EXTRACTOR SPRING*	**32197**	EXTRACTOR SPRING	X	X	X	X	X
20	BOLA DE EXTRACTOR	*EXTRACTOR BALL*	**32196**	BOLA	X	X	X	X	X
21	EXTRACTOR	*EXTRACTOR*	**32198**	STANDARD EXTRACTOR	X	X			
			32198B	MAGNUM EXTRACTOR			X	X	X
22	POMO DEL CERROJO	*BOLT KNOB*	**31926**	POMO BOLA	X	X	X	X	X
23	CULATA	*STOCK*	**33125**	CULATA MADERA B14 LH CORTO (TIMBER)	X	X			
			33125LM	CULATA MADERA B14 LH LARGA MAGNUM (TIMBER)			X	X	X
24	ROTULA PORTACORREA	*SLING SWIVEL*	**29116**	BACK SCREW	X	X	X	X	X
25	MUELLE DEL GARGADOR	*MAGAZINE SPRING*	**31444S**	MUELLE CAJERA		X	X	X	X
			31444C	MUELLE MAGAZINE CREEDMOOR	X				
26	SEGUIDOR	*FOLLOWER*	**31427**	SEGUIDOR CORTO	X	X			
			32115	SEGUIDOR LARGO			X	X	X
27	GUARDAMONTE	*TRIGGER GUARD*	**32216**	B14 SHORT SUPPORT	X	X			
			32116L				X	X	X
28	BANDEJA DE CARGADOR	*MAGAZINE TRAY*	**32218**	B14 SHORT CAP	X	X			
			32218L				X	X	X
29	MUELLE BOTON APERTURA	*OPENNING BUTTON SPRING*	**32219**	MUELLE FLOOR PLATE	X	X	X	X	X
30	CARGADOR	*MAGAZINE*	**31431**	CAJA CORTA	X	X			
			32113U	CAJA ULTRA			X	X	X
31	PASADOR GUARDAMONTES	*TIGER GUARD LOCK PINS*	**32132B**	PASADOR Ø2x14 DIN 7	X	X	X	X	X
32	BOTON APERTURA CARGADOR	*TIGGER GUARD LOCKING PIN*	**32217**	PALANCA B14	X	X	X	X	X
33	TORNILLO TRASERO CULATA	*STOCK REAR SCREW*	**31422**	TORNILLO ALLEN TRASERO CL12	X	X	X	X	X
34	TORNILLO DELANTERO CULATA	*STOCK FRONT SCREW*	**31422B**	TORNILLO DELANTERO B14	X	X	X	X	X
35	CONJUNTO ALZA	*REAR SIGHT*	**31660**	CONJUNTO ALZA BX11	X	X	X	X	X
36	CONJUNTO MIRA	*FRONT SIGHT*	**32282**	MIRA BX11	X	X	X	X	X
37	TORNILLO ALZA-MIRA	*SIGHT SCREWS*	**20549T**	TORNILLO DE FIJACION A Y M TORX	X	X	X	X	X
*			**H146**	CERAKOTE H-146 GRAPHITE BLACK	X	X	X	X	X

Rev0 11-01-2022